REV.	DESCRIPTION	DATE

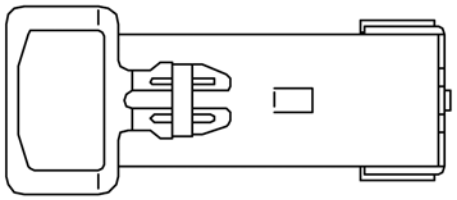

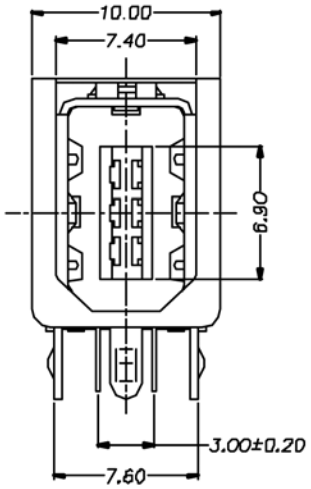

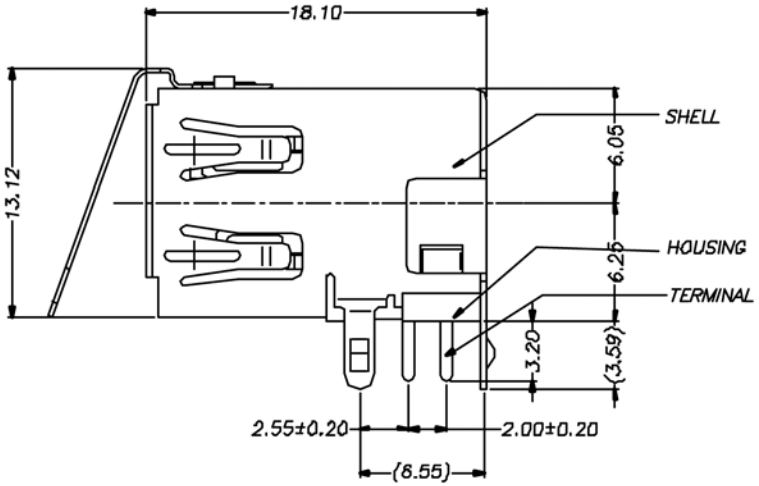

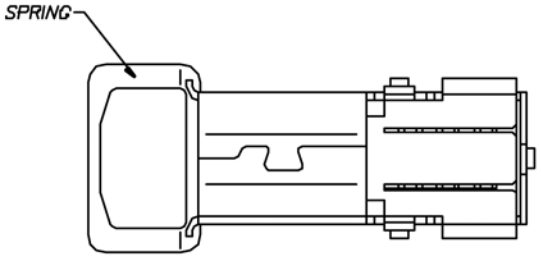

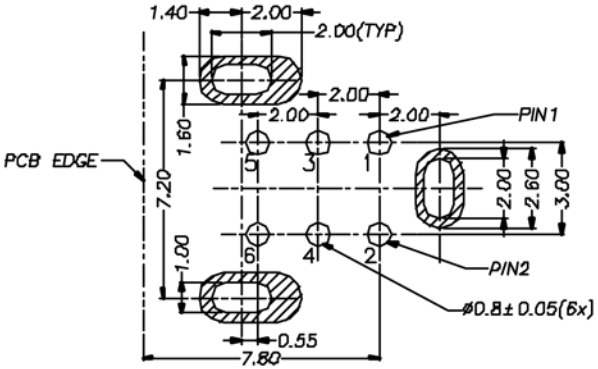

PCB LAYOUT(PCB t=1.6mm)
TOLERANCE:±0.10mm
SCALE 4:1

NOTE:

1. Material:
   Housing: Hight Temperature Polyester G.F. UL94V-0.
   Shell: Copper Alloy.
   Spring: SUS301
   Contact: Copper Alloy.
2. Plating:
   Shell: Solderable Nickel 80u".
   Contact: Au 30u".

CYPRESS INDUSTRIES www.cypressindustries.com		Description: IEEE1394 6P Receptacle Up-Right w/Spring RoHS Compliant			
DATE	04/18/02"	Part No: CC1394-32006-60X		REV	1
DWN	Evita			UNIT	MM
CHK	Allen		SCALE: 2.5/1	SHEET	1/1
APP	C.M. Chang	TOLERANCES	0.X: ±0.50	0.XX: ±0.25	∠: ±1°