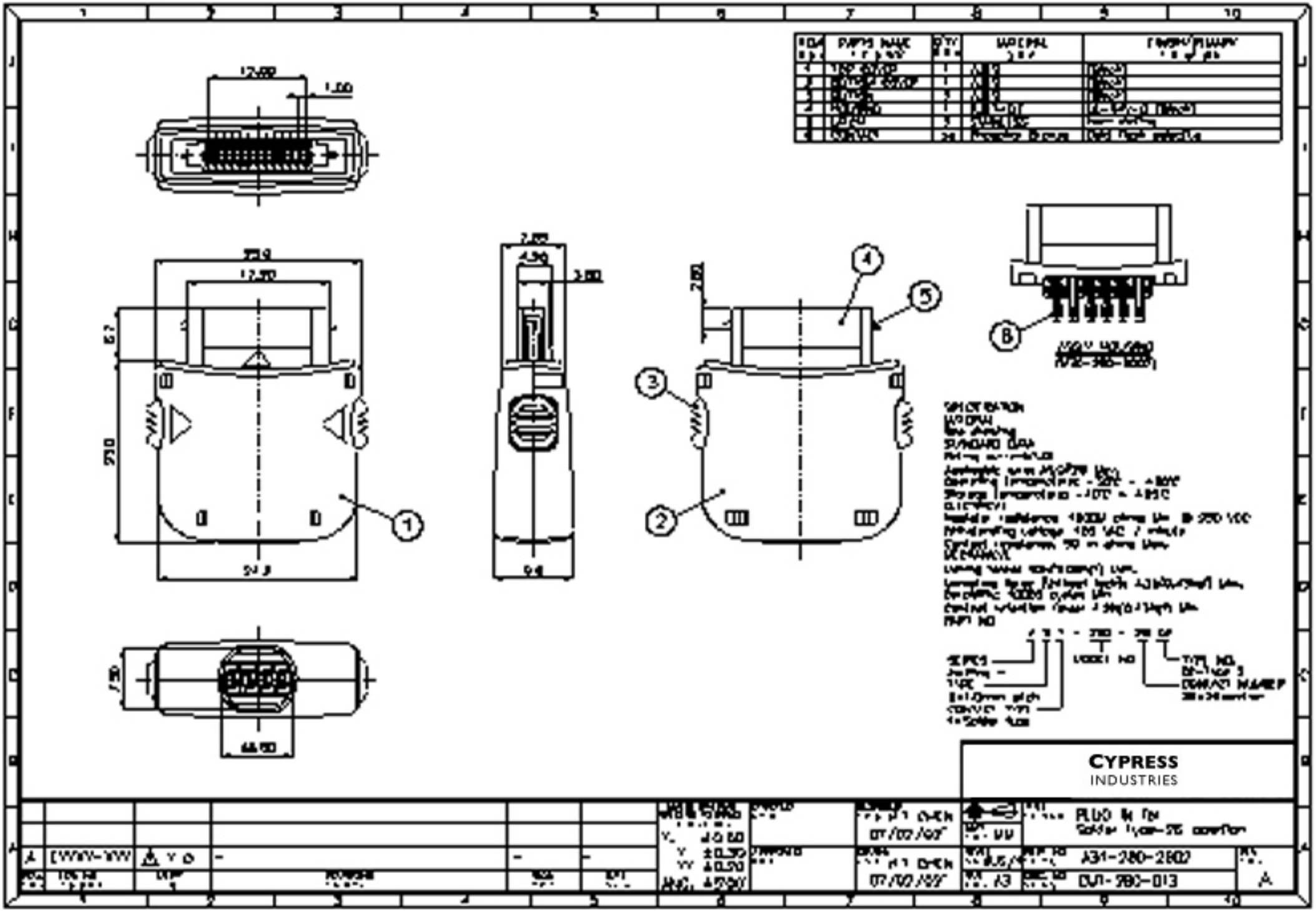
CYPRESS
INDUSTRIES
A31-280-2802
DWG-280-013
A